SpaceLogic Sensors
SHD2 Series Humidity Sensors – BACnet and Modbus

Product Description

SpaceLogic SHD2 Series Humidity Sensors are duct mount sensors for monitoring humidity and temperature to ensure a building's optimum energy efficiency.

Each device is an active sensor that converts a measurement into BACnet MS/TP or Modbus RTU output.

As an integral part of Schneider Electric EcoStruxture™ Building Operation (EBO) software, the SHD2 protocol models' Ready-Connect feature enables a plug & play experience for easy integration and configuration.

Different models are available based on application requirements for lower-cost installations.

SHD2 is available with an LCD display option on select models (see Available Products, below).

Features

- Easy to install:
  - Latch-on sensor cover
  - Screwless terminal block wiring with spring actuator
  - Mounting accessory adjusts probe length in duct
- Quick to commission with DIP switch selectable BACnet and Modbus outputs via RS-485
- 1% or 2% with NIST certificate, 2% RH module – field replaceable
- Solid state temperature sensor providing high accuracy measurements
- Multiple temperature thermistors and transmitter options, compatible with a wide range of controllers
- Backlit LCD display
- 2-point calibration certificate available for humidity and temperature or temperature-only replaceable module
- Key component for the LEED green building program and WELL Building Standard*

*Leadership in Energy and Environmental Design (LEED) is a registered trademark of the US Green Building Council. The WELL Building Standard is a trademark of the International WELL Building Institute in the United States and other countries.

Available Products

	User Interface	Output	RH Accuracy	Temperature
SHD2	[ ]	[P]	[2]	[A]
	L = LCD display X = None	P = BACnet/Modbus	2 = 2%	A = Transmitter only

Example:

SHD2 [L] [P] [2] [A]

Note: Replaceable RH and temperature modules available to be ordered separately per table below.

Replaceable RH Elements & Temperature and Humidity Calibration Modules

Model	Description	Temp. Calibration	RH Calibration
SLXRHS2N*	Replaceable RH sensor, 2% with NIST certificate	N/A	2-point calibration
SLXRHS2X	Replaceable RH sensor, 2%	N/A	2-point calibration
SLXRHS1N	Replaceable RH sensor, 1% with NIST certificate	N/A	2-point calibration
SLXXT2**	Replaceable temperature module with 2-point calibration certificate	2-point calibration	N/A
SLXRHT2**	Replaceable temperature and humidity module with 2-point calibration certificate	2-point calibration	2-point calibration

*Not for use with SHO2 Series outdoor humidity sensors.
**For use on temperature transmitter models only.
Note: For instructions on installing replaceable elements, see Z208536-0x, *Replacement Humidity and Temperature Sensors Installation Guide*.

USA: +1 888-444-1311
Europe: +46 10 478 2000
Asia: +65 6484 7877
www.schneider-electric.com

Life Is On | Schneider Electric

© 2025 Schneider Electric. All rights reserved. All trademarks are owned by Schneider Electric Industries SAS or its affiliated companies.

January 2025
GEX55243-02 nk

Safety Information

Important Information

Read these instructions carefully and look at the equipment to become familiar with the device before trying to install, operate, service or maintain it. The following special message may appear throughout this bulletin or on the equipment to warn of potential hazards or to call attention to information that clarifies or simplifies a procedure.

NOTICE

NOTICE is used to address practices not related to physical injury.

⚠ WARNING

WARNING indicates a hazardous situation which, if not avoided **could result in** death or serious injury.

Please Note

Electrical equipment should be installed, operated, serviced and maintained only by qualified personnel. No responsibility is assumed by Schneider Electric for any consequences arising out of the use of this material.

A qualified person is one who has the skills and knowledge related to the construction, installation and operation of electrical equipment and has received safety training to recognize and avoid the hazards involved.

Safety Precautions

⚠ WARNING

HAZARD OF ELECTRIC SHOCK, EXPLOSION OR ARC FLASH

- Apply appropriate personal protective equipment (PPE) and follow safe electrical work practices. See NFPA 70E or CSA Z462.
- This equipment must only be installed and serviced by qualified electrical personnel.
- Turn off all power supplying this equipment before working on or inside equipment.
- Always use a properly rated voltage sensing device to confirm power is off.
- Replace all devices, doors and covers before turning on power to this equipment.

Failure to follow these instructions can result in death, serious injury or equipment damage.

This product is intended for use in HVAC and building environmental control applications.

It is not intended for direct medical monitoring of patients.

It is not designed for life-safety applications.

Read and understand these instructions before installing this product.

The installer is responsible for all applicable codes.

If this product is used in a manner not specified by the manufacturer, the protection provided by the product may be impaired. No responsibility is assumed by the manufacturer for any consequences arising out of the use of this material.

Specifications

Operating and Storage Environment	
Operating temperature	-35 to 60 °C (-31 to 140 °F)[1]
Operating humidity	0 to 95% RH (non-condensing)[1]
Storage temperature	-35 to 70 °C (-31 to 158 °F)[1]
Storage humidity	0 to 95% RH (non-condensing)
Power supply	20 to 30 Vdc, 24 Vac, 50 to 60 Hz
Output	BACnet MS/TP, Modbus RTU
Power consumption	See Maximum Power Consumption table, page 7
Tube length	200 mm
Medium	Neutral gas, air
Housing material	Polycarbonate; Flammability rating UL 94 V0
Mounting location	For indoor use only. Not suitable for wet locations.
IP rating	IP 65
Protection class	Class III
Humidity Sensor	
Sensor type	Solid state capacitive, replaceable
Accuracy[2]	±2% from 10 to 80% RH @ 25 °C (77 °F) ±1%, ±2% NIST and 2% replaceable option
Hysteresis	1.5% typical
Linearity	Included in accuracy specification
Stability	±1% @ 20°C (68 °F) annually for 2 years
Output range	0 to 100% RH
Temperature coefficient	±0.1% RH/°C above or below 25 °C (77 °F) typical
Temperature Sensor	
Sensor type	Solid state, integrated circuit
Time constant	Air velocity 1.5 m/s. approx. 72 s; Air velocity 3.0 m/s. approx. 52 s
Accuracy[3]	±0.2 °C (±0.4 °F) typical at 25 °C
Resolution	0.1 °C (0.1 °F)
Range	-35 to 60 °C (-31 to 140 °F)*
Display Models	
LCD type	Positive display with backlight
Measurement values displayed	Temperature: °C or °F Humidity: % RH
Display resolution	Temperature: 0.1 °C or °F Humidity: 0.1% RH
Wiring Terminals	
Wiring	Screwless terminal block with spring actuator, 16-24 AWG
EBO integration[4]	Download Modbus Device Type template for Modbus models from the Building Application tool.
Warranty	
Limited warranty	2 years

USA: +1 888-444-1311
Europe: +46 10 478 2000
Asia: +65 6484 7877
www.schneider-electric.com

Life Is On | Schneider Electric

© 2025 Schneider Electric. All rights reserved. All trademarks are owned by Schneider Electric Industries SAS or its affiliated companies.

January 2025
GEX55243-02 nk

Specifications (cont.)

Regulatory Information	
Agency approvals	UL 916, European Conformance CE: EN 60730-1, EN 61000-6-2, EN61000-6-3, EN 61000 Series - Industrial Immunity, EN 61326-1 FCC Part 15 Class A Green Premium (REACH, RoHS), RoHS 2 (China), RCM (Australia), ICES-003 (Canada), UKCA (UK), EAC (Russia)

1. Duct mount model with temperature and humidity only. LCD operation from -10 to 60 °C (14 to 140 °F).
2. Humidity sensor measurement uncertainty should include: accuracy, hysteresis, temperature coefficient and stability. Humidity accuracy up to -20°C.
3. ±0.5 °C accuracy from 0 to 60°C, ±1°C accuracy from -35 to 0°C over the full operating range.
4. See http://bms-applications.schneider-electric.com/type/MB/download/318 for device import file and instructions.

Dimensions mm (in.)

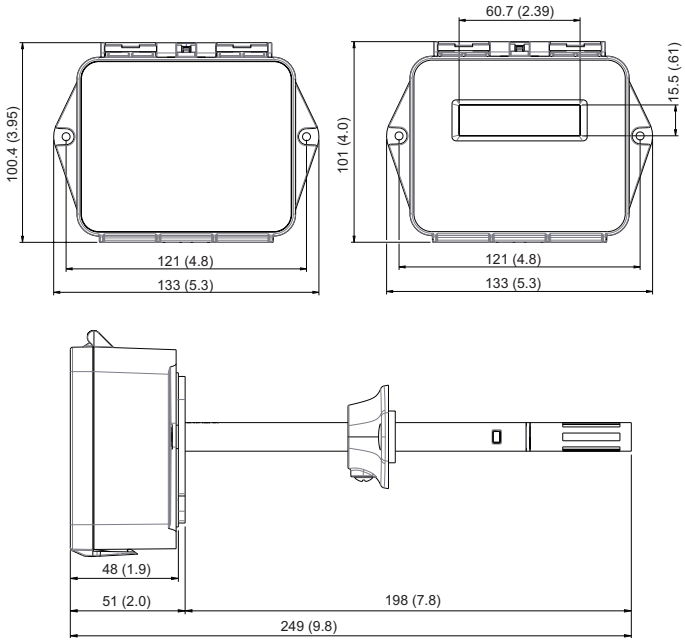

Installation

1. Prepare the duct for installation by drilling holes to accommodate the probe tube. Ensure the gasket on the back is depressed to prevent leakage between the product and the duct. Do not over-tighten the screws.

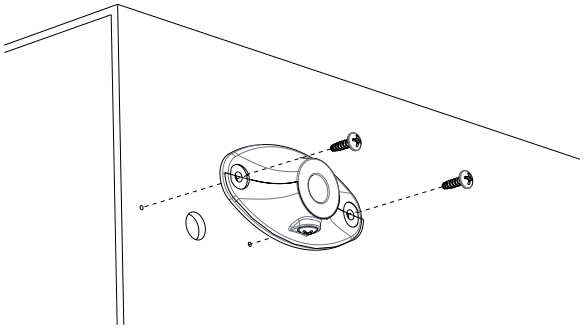

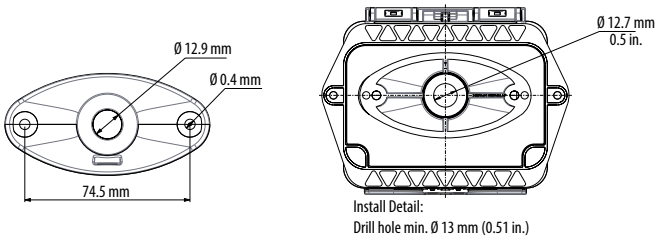

2. Ensure the probes are installed in the direction of the air flow. Install the probe in the middle of the duct and away from any restrictions to allow proper air flow.

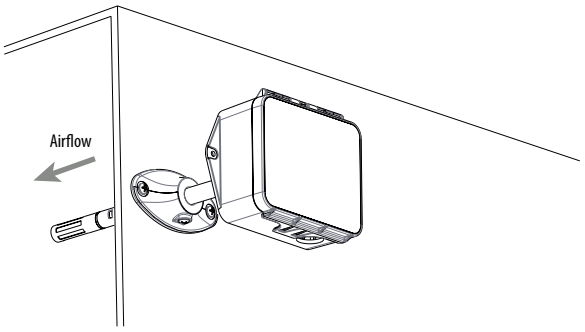

3. Release the latch on the lid to access the DIP switches and terminal block.

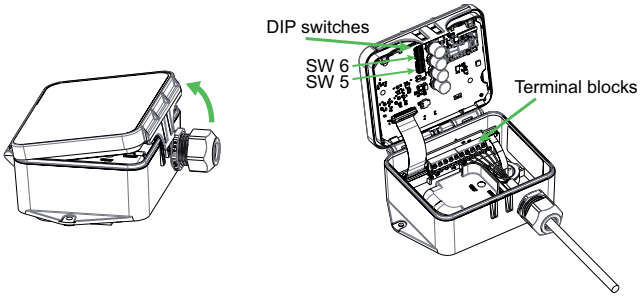

USA: +1 888-444-1311
Europe: +46 10 478 2000
Asia: +65 6484 7877
www.schneider-electric.com

Life Is On Schneider Electric

© 2025 Schneider Electric. All rights reserved. All trademarks are owned by Schneider Electric Industries SAS or its affiliated companies.

January 2025
GEX55243-02 nk

Installation (cont.)

4. Wire the connections according to the diagram in the Wiring section. This device features spring terminals for screwless termination. Open the terminal point by inserting a screwdriver, then insert the wire above. Release the screwdriver to hold the wire in place. Details on wiring and configuration are contained in the next sections of this document.

NOTICE

MISSING TEMPERATURE & HUMIDITY READINGS

- Ensure flex cable is in place after wiring.

Failure to follow these instructions can result in no temperature or humidity readings.

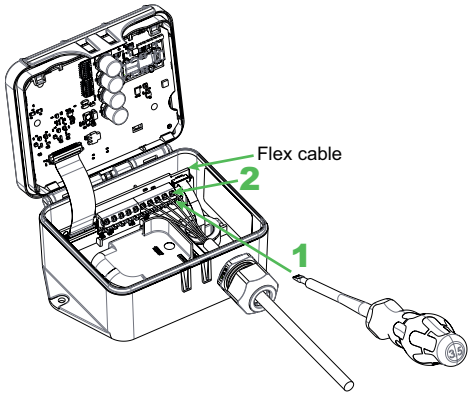

5. Secure the latch-on cover in the closed position and remove the clear protective mask on the front label of the device.

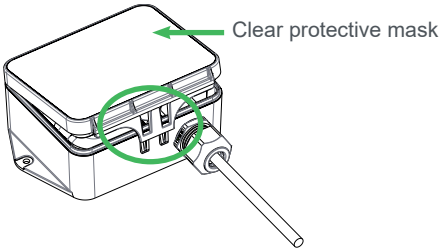

Wiring

NOTICE

PRODUCT DAMAGE DUE TO ELECTRO-STATIC DISCHARGE

Circuit boards and components can be damaged by static electricity or electro-static discharge (ESD). Observe the following electro-static precautions when handling this product and cables and components connected to the product.

- Keep static-producing material such as plastic, upholstery, carpeting, etc. out of the immediate work area.
- Store the product in ESD-protective packaging when it is not installed in the panel
- When handling the product or a conductive cable/ESD-sensitive component connected to the product, wear a conductive wrist strap connected to ground through a minimum of 1 MΩ resistance
- Do not touch exposed conductors and component leads with skin or clothing.

Failure to follow these instructions can result in equipment damage.

NOTICE

INACCURATE READINGS

- Do not run wiring in the same conduit as AC power wiring. Close proximity to AC power may influence accuracy.

Failure to follow these instructions can result in reduced accuracy.

Wiring Diagram

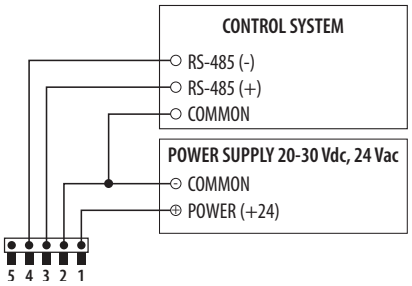

Configuration

Address Configuration

Each device on a single network must have a unique address. Set the DIP switch labeled “ADDRESS” to assign a unique address before the device is connected to the network. If an address is selected that conflicts with another device, neither device will be able to communicate.

Address the device as any whole number between and including 1 to 127. Note that zero is not a valid address for Modbus; zero is a valid address for BACnet. Positions 1 through 7 of the “ADDRESS” DIP switch designate the address. Position 8 toggles between the Modbus and BACnet communication protocols, as shown in the diagram below. This is the right bank of DIP switches on the sensor.

USA: +1 888-444-1311
Europe: +46 10 478 2000
Asia: +65 6484 7877
www.schneider-electric.com

Life Is On | Schneider Electric

© 2025 Schneider Electric. All rights reserved. All trademarks are owned by Schneider Electric Industries SAS or its affiliated companies.

January 2025
GEX55243-02 nk

Configuration (cont.)

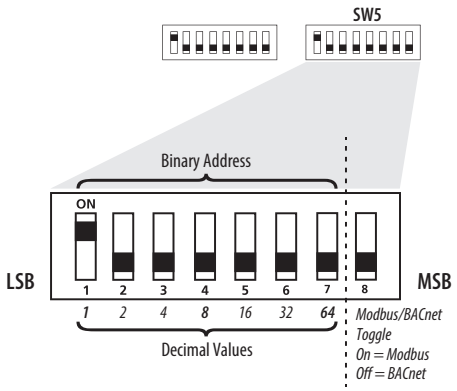

To set an address using the DIP switch, simply add the values of any switches that are in the ON position.

For example, an address of '73' is set as shown in the diagram below.

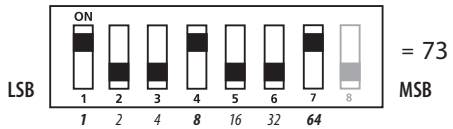

Position number 1 has an ON value of 1, position number 4 has an ON value of 8 and position number 7 has an ON value of 64 (1 + 8 + 64 = 73).

Communications Configuration

See the Installation section, Step 3 for the location of the DIP switch. The following parameters are configurable:

- Parity (Modbus only): None, Odd, None1 (one stop bit), Even
- Baud rate: 9600, 19200, 38400, 57600 (Modbus), 76800 (BACnet)

Example: No Parity, 19200 Baud:

1	2	3	4	5	6	7	8
off	off	on	off	off	off	off	off
None		19200 Baud		Unused			

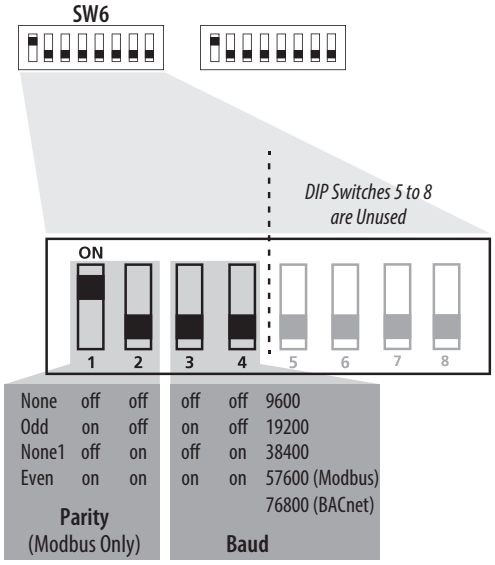

Modbus Point Map Function Codes:

Function Code	Function
03	Read holding (RW) registers
04	Read input (RO) registers
06	Write single register*
16	Write multiple registers
01	Read coils
05	Write single coil
15	Write multiple coils

* Not supported.

All of these values correspond to BACnet objects with the same name. See the BACnet Conformance Statement for their definitions.

Note that an attempt to write to "read only" holding registers will give an error and the entire write command will not be executed even if writing to read/write locations were also requested. Exception code 2 is given in this case. "Preserved" means the values is maintained through power outages.

USA: +1 888-444-1311
Europe: +46 10 478 2000
Asia: +65 6484 7877
www.schneider-electric.com

Life Is On | Schneider Electric

© 2025 Schneider Electric. All rights reserved. All trademarks are owned by Schneider Electric Industries SAS or its affiliated companies.

January 2025
GEX55243-02 nk

Configuration (cont.)

32-Bit Input Registers (Read Only):

16-Bit Register Location	Description	Format
1	Temp reading	32-bit floating point
2		
3	Humidity reading	32-bit floating point
4		
5~8	Unused	NA
9	Model number	4x16-bit ASCII characters as a single query
10		
11		
12		
13~41	Unused	NA
42	Serial number	4x16-bit ASCII characters as a single query
43		
44		
45		
46~53	Unused	NA

32-Bit Holding Registers (Read/Write):

16-Bit Register Location	Description	Format
7~39	Device name	4x16-bit ASCII characters as a single query

Note: All holding registers are preserved during power outages.

Coils (Read/Write):

Register	Description
5*	Sets display (only) temperature units (1 = °F, 0 = °C)

*Preserved during power outages.

BACnet Descriptions

Note: In the tables below, all properties are read-only unless otherwise noted. “Preserved” means the value is maintained through power outages.

Present_Value Range Restrictions:

Object Name	Minimum Value	Maximum Value
DEV - Object_ Name	1 Character	65 Characters
Device_Instance	0	4,194,302

Standard Object Types Supported:

Object Type	Supported Optional Properties	Writable Properties
Analog Input - AI	Reliability	None
Binary Value - BV	None	Present Value
Device - DEV	Max Info Frames Max_Master	APDU_Timeout Max_Master Object_Name

Objects Table:

Object Name	Object Identifier	Object Property
Room Temperature	AI 1	Temperature in room (°C)
Room Humidity	AI 2	Humidity in room
Temperature Units*	BV4	ACTIVE displays temperature in Fahrenhiet INACTIVE displays temperature in Celsius

*Applicable to LCD models only.

Device Objects Table:

Object Name	Object Identifier	Object Property	Descrip.
Plant Room Units XXXXXXXX	Vendor_ID + nnn	Object _Identifer (R/W)	Unique value where nnn initially is the MS/TP address

BACnet Protocol Implementation Conformance Statement

Vendor Name: Schneider Electric

Product Name: Plant Room Humidity and Temperature Unit

Product Model: SHD2XPXXXX

BACnet Protocol Version: 1

BACnet Protocol Revision: 16

Product Description: Environmental Sensor

BACnet Standardized Device Profile (AnnexL): BACnet Application Specific Controller (B-ASC)

USA: +1 888-444-1311
Europe: +46 10 478 2000
Asia: +65 6484 7877
www.schneider-electric.com

Life Is On | Schneider Electric

© 2025 Schneider Electric. All rights reserved. All trademarks are owned by Schneider Electric Industries SAS or its affiliated companies.

January 2025
GEX55243-02 nk

LCD Operation

The screen displays sensor values for RH, temperature and Celsius/Fahrenheit.

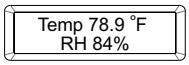

Maximum Power Consumption

Series	LCD	Temp./RH	Max. Power
SHD2 Protocol	Yes	Yes	1.5 VA @ 24 VAC
	No	Yes	0.8 VA @ 24 VAC

China RoHS Compliance Information
Environment-Friendly Use Period (EFUP) Table

部件名称	有害物质 - Hazardous Substances					
Part Name	铅 (Pb)	汞 (Hg)	镉 (Cd)	六价铬 (Cr (VI))	多溴联苯 (PBB)	多溴二苯醚 (PBDE)
电子件 Electronic	X	O	O	O	O	O

本表格依据SJ/T11364的规定编制。
O: 表示该有害物质在该部件所有均质材料中的含量均在GB/T 26572规定的限量要求以下。
X: 表示该有害物质至少在该部件的某一均质材料中的含量超出GB/T 26572规定的限量要求。
（企业可在此处，根据实际情况对上表中打 "X" 的技术原因进行进一步说明。）

This table is made according to SJ/T 11364.
O: indicates that the concentration of hazardous substance in all of the homogeneous materials for this part is below the limit as stipulated in GB/T 26572.
X: indicates that concentration of hazardous substance in at least one of the homogeneous materials used for this part is above the limit as stipulated in GB/T 26572

Z000057-0B

Schneider Electric Limited
Stafford Park 5
Telford TF3 3BL
United Kingdom

USA: +1 888-444-1311
Europe: +46 10 478 2000
Asia: +65 6484 7877
www.schneider-electric.com

© 2025 Schneider Electric. All rights reserved. All trademarks are owned by Schneider Electric Industries SAS or its affiliated companies.

January 2025
GEX55243-02 nk